BR - BUFFET RESTAURANTE

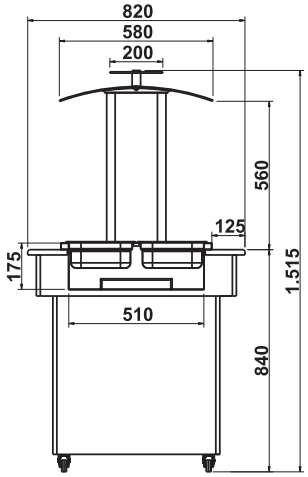

BRCQ

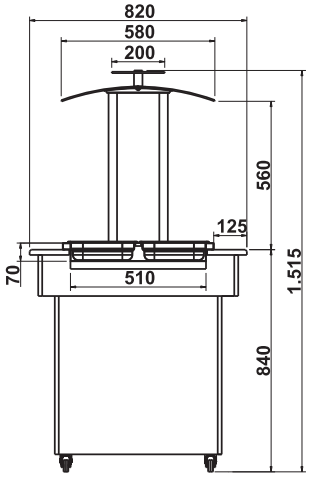

BRCF

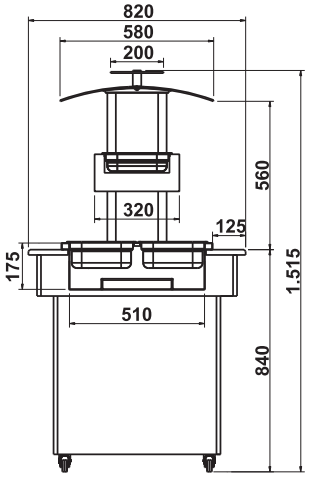

BRCQF

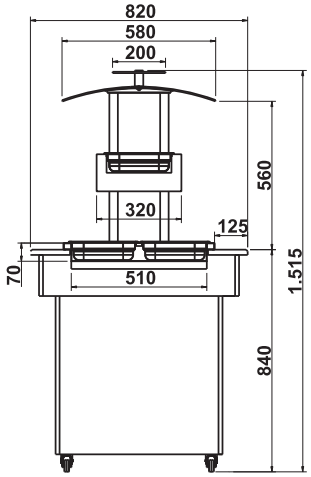

BRCFF

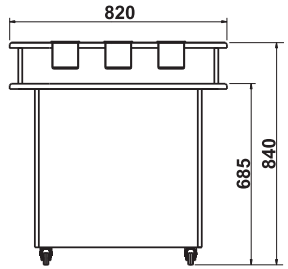

CPTBR

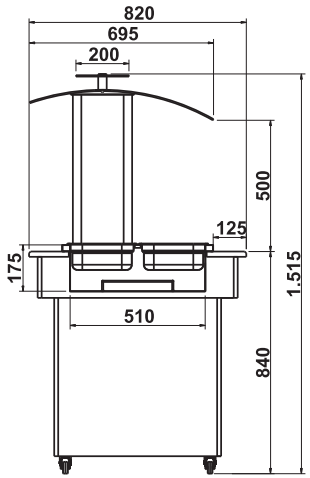

BRLQ

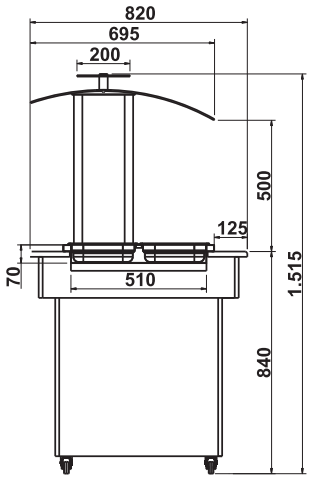

BRLF

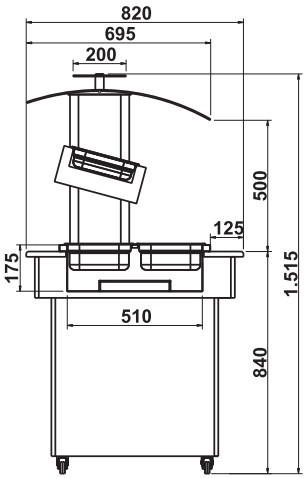

BRLQF

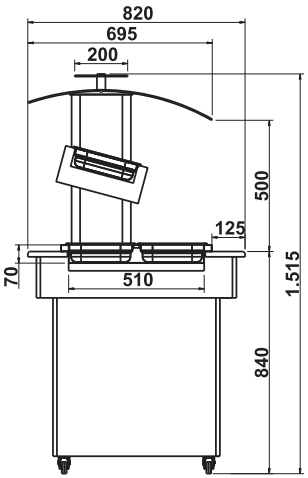

BRLFF

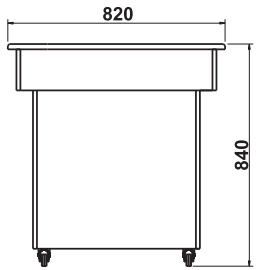

CPBR